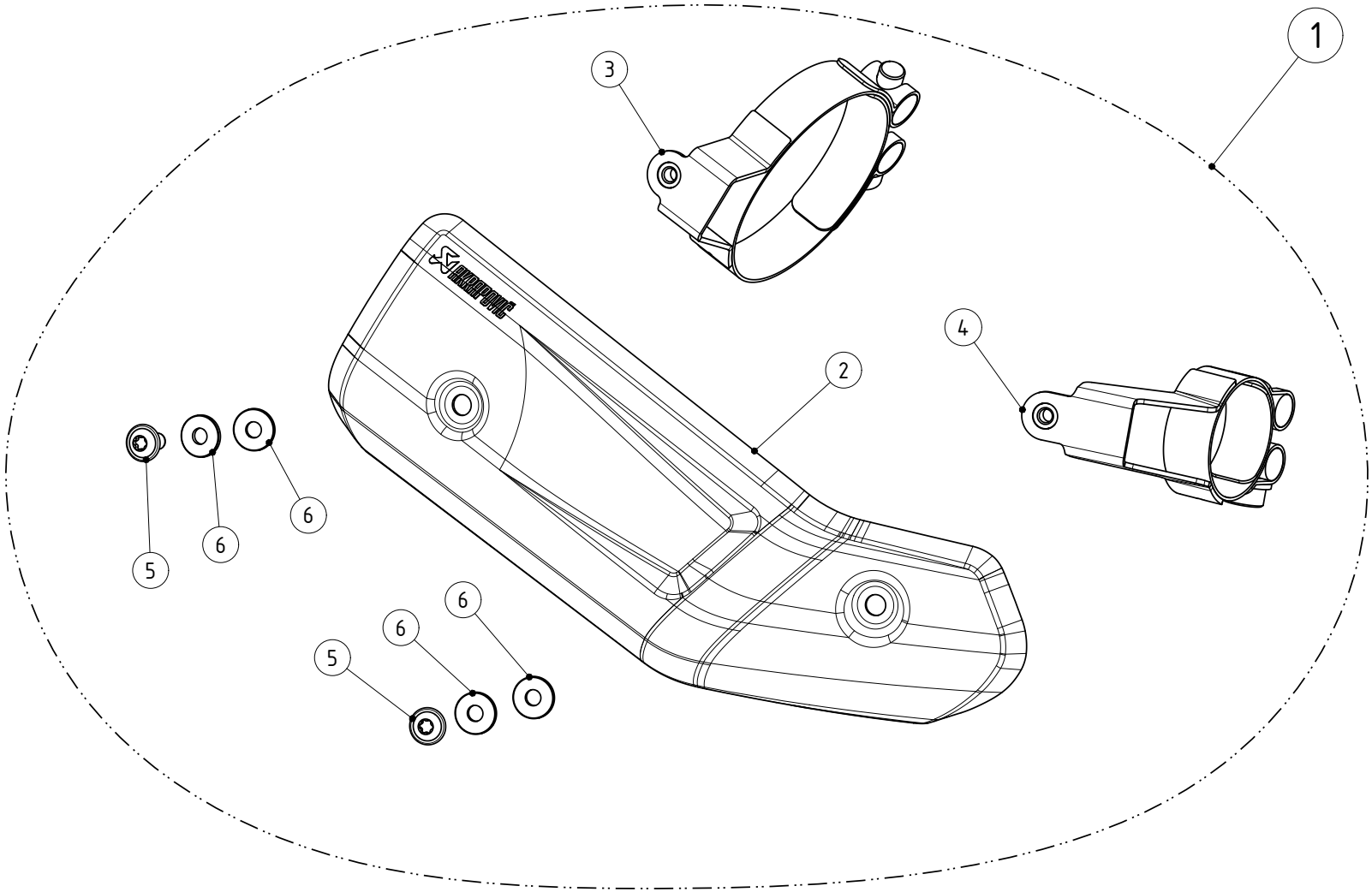
1
2
3
4
5
6
5
6
6
6

No.	SalesCode	Description	Qty.
1	P-HSY3SO2	heat shield CA Opt.	1
2	P-HSY3SO2/1	heat shield CA	1
3	P-R190	clamp SS	1
4	P-R191	clamp SS	1
5	P-FB157	bolt	2
6	P-DRH2/BAR316	washer SS	4